



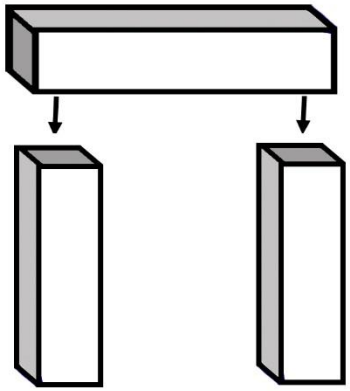



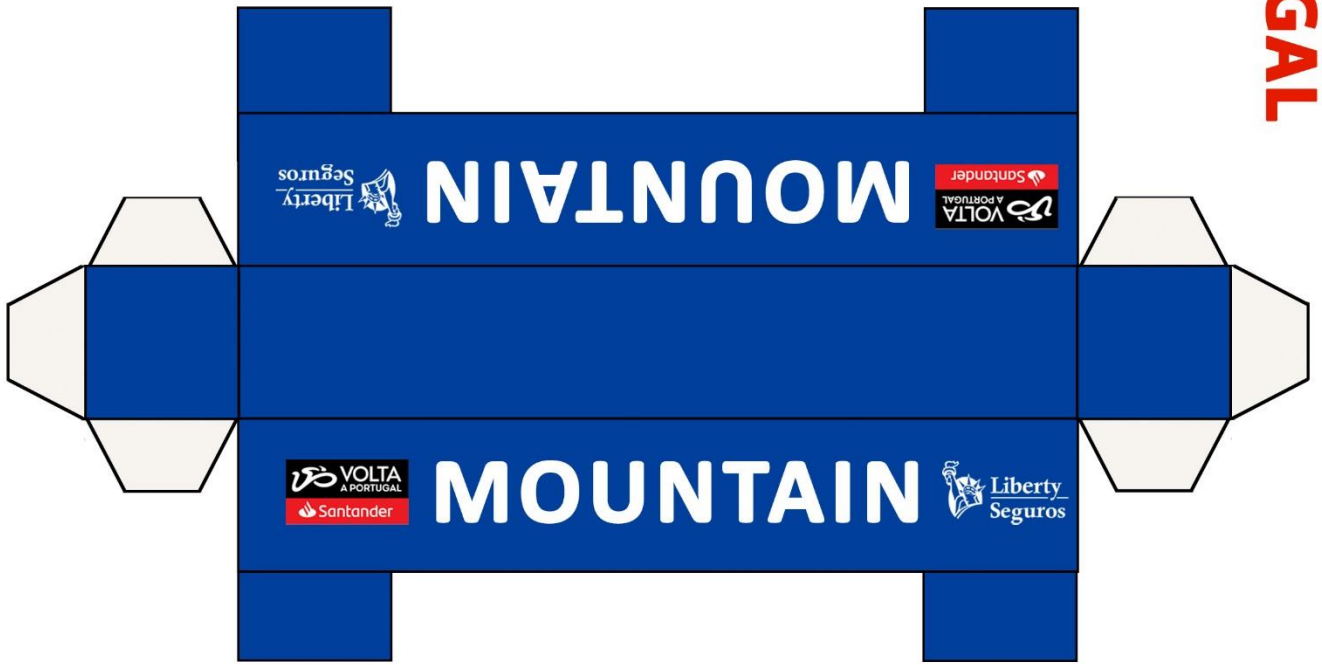

VOLTA A PORTUGAL
MOUNTAIN
@aafarelo